Hughes 9410 Mobile Satellite Terminal

Installation Guide

H67706
Revision B
March 03, 2022

11717 Exploration Lane, Germantown, MD 20876

Phone (301) 428-5500 Fax (301) 428-1868/2830

Contents

Understanding safety alert messages

Safety alert messages call attention to potential safety hazards and tell you how to avoid them. These messages are identified by the signal words DANGER, WARNING, CAUTION, or NOTICE, as illustrated below. To avoid possible property damage, personal injury, or in some cases possible death, read and comply with all safety alert messages.

Messages concerning personal injury

The signal words DANGER, WARNING, and CAUTION indicate hazards that could result in personal injury or in some cases death, as explained below. Each of these signal words indicates the severity of the potential hazard.

WARNING

WARNING indicates a potentially hazardous situation which, if not avoided, could result in death or serious injury.

CAUTION

CAUTION indicates a potentially hazardous situation which, if not avoided, could result in minor or moderate injury.

Messages concerning property damage

A NOTICE concerns property damage only.

NOTICE

NOTICE is used for advisory messages concerning possible property damage, product damage or malfunction, data loss, or other unwanted results—but *not* personal injury.

Safety symbols

The generic safety alert symbol

calls attention to a potential personal injury hazard. It appears next to the DANGER, WARNING, and CAUTION signal words as part of the signal word label. Other symbols may appear next to DANGER, WARNING, or CAUTION to indicate a specific type of hazard (for example, fire or electric shock). If other hazard symbols are used in this document they are identified in this section.

Chapter 1
Introduction

The purpose of this guide is to instruct personnel on how to install the Hughes 9410 mobile satellite terminal in a vehicle.

WARNING

This product must be installed by authorized service personnel.

Damages resulting from the failure to conform to the instructions found herein, as well as standard installation practices, will be the responsibility of the installer.

1.1 Hughes 9410 mobile satellite terminal

The 9410 is a fully integrated land mobile class 11 satellite terminal with Ethernet and WLAN interfaces.

Figure 1. 9410 mobile satellite terminal (integrated modem and antenna)

The Hughes 9410 has a single connector for power and Ethernet (no cable included with the terminal). There are two versions of the 9410, each with different interfaces. See the variants listed in Table 1.

Table 1. 9410 variants

9410 Version	Hughes P/Ns	Interfaces
9410LW	3501431-0003	Ethernet, WLAN
9410L	3501431-0002	Ethernet

1.1.1 Terminal physical dimensions

Size: 270 mm x 150 mm

Weight: 3.0 kg

1.1.2 Package Material and accessories available

The 9410L or 9410LW is shipped in a box containing only the mobile satellite terminal, with no accessories.

1.1.3 Accessories available

Various accessories like data and power cables are available in the Hughes catalog.

Several accessories (ready-made cables, custom cables, connectors and mounting hardware) are available for connecting the 9410. See the details below.

1. Power and data cable, blunt wire, 5 m (P/N: 3501314-0002)
2. Power and data cable, blunt wire, 10 m (P/N: 3501314-0003)

3. Power and data cable, cigarette lighter plug and RJ45 socket, 5 m (P/N: 3501314-0004)

4. Custom power and data cable, 100 m (P/N: 9509897-0001)
5. Magnetic Mounts (P/N: 3501152-0002)

6. RJ45 Wiring Block (P/N: 9510250-0002)

7. Mating power and data connector, bare (P/N: 9509554-0001)

Please refer to the Hughes catalog for further details:
https://www.hughes.com/products-and-technologies/satellite-ground-systems/mobile-satellite-terminals/hughes-bgan-satellite-terminals

1.1.4 Power port

The power port is the connection from the power supply (vehicle battery or another 12 VDC power source) to the satellite terminal. The power cable has a +V power line, an ignition sense line, and a –V power line.

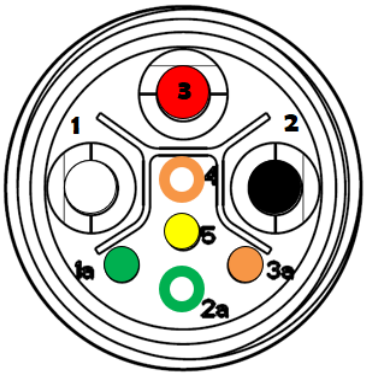

Figure 2. 9410 power and data port connector pinout

Table 2. Pinout details

Pin	Wire Color	Description
1	White	Remote switch/ Ignition Sense
2	Black	GND
3	Red	PWR 12 VDC
1a	Green	ENET-RXN
2a	White/green	ENET-RXP
3a	Orange	ENET-TXN
4	White/orange	ENET-TXP
5	Yellow	Not used

1.1.5 System power requirements

There is one power connection on the terminal. This must be connected to a 12 VDC power supply.

Power requirements and consumption are listed in Table 3.

Table 3. System power requirements

Voltage Input Minimum	Voltage Input Maximum	Power Draw Idle	Power Draw Maximum
9 VDC	20 VDC	15 W	50 W

1.1.6 SIM card

The satellite terminal requires an Inmarsat SIM to be installed.

In order to install the SIM, unscrew the six M3 screws using a Torx 10 screwdriver and carefully lift up the radome, as shown in Figure 3 on page 10. Please note that the torque value for this type of screw is 0.6–0.8 Nm.

Note: Before removing the radome please make sure the terminal is disconnected from the power.

Insert the SIM (supplied by the dealer) into the SIM card holder with the metal contacts facing down. You will hear a click once the SIM card is correctly inserted. The SIM card will protrude slightly from the metal casing, as shown in Figure 4.

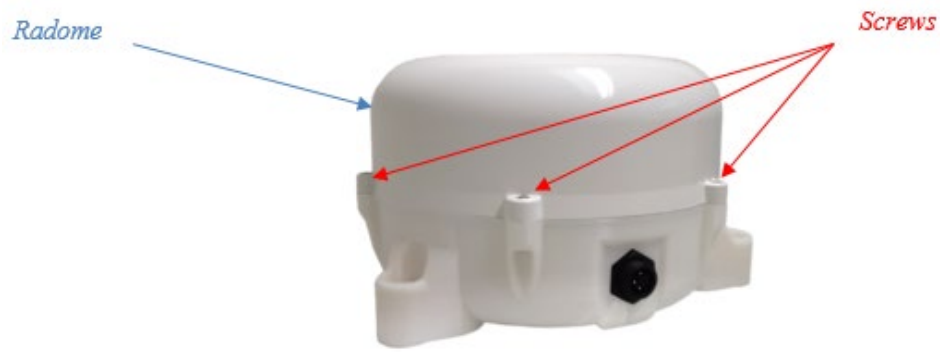

Figure 3. Removing the radome

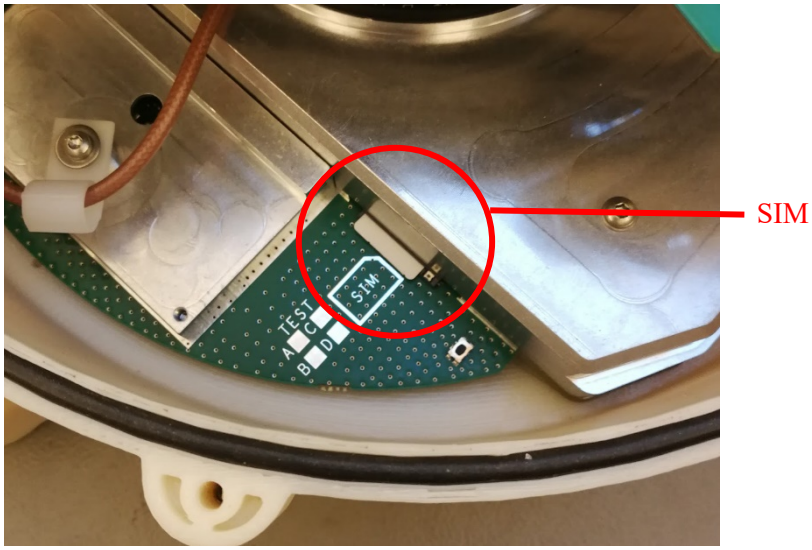

Figure 4. Installing the SIM card

Carefully replace the radome and reinstall the screws with a torque setting of 0.6—0.8 Nm.

Chapter 2

Custom cable connections

2.1 Adding an RJ45 connector to the power cable

Follow the instructions in Table 4 to add an RJ45 connector to the power and data cable.

Table 4. Power cable and RJ45 options

Power Cable Type	Power Cable Hughes P/N	RJ45 Connector Hughes P/N
Power and data cable, blunt wire, 5 m	3501314-0002	9510250-0002
Power and data cable, blunt wire, 10 m	3501314-0003	
Power and data cable, blunt wire, 100 m	9509897-0001	

1. Strip the power cable to expose the internal wires.
2. Connect the RJ45 wiring block to the power cable using a straight-through connection. Reference Figure 5 and Table 5 on page 12 for the power and RJ45 connector pinouts.

Internal Wires Power Cable

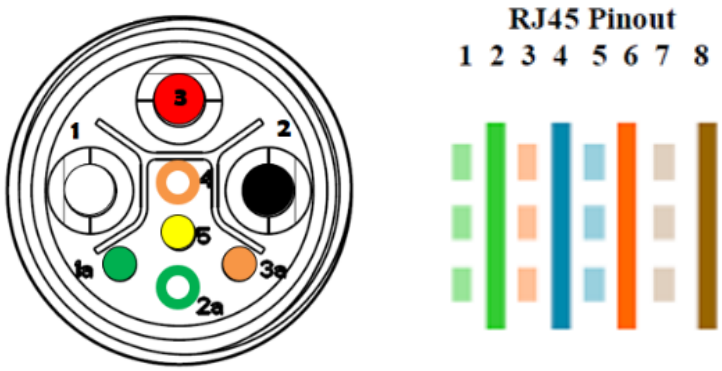

Figure 5. Power cable: RJ45 connection details

Table 5. Power cable: RJ45 connection details

Power Cable	Power Cable Wire Color	Power Cable Wire Function	Connection Type	RJ45 Pinout
1a	Green	Ethernet RX-	Straight-Through cable	6
2a	White/Green	Ethernet RX+	Straight-Through cable	3
3a	Orange	Ethernet TX-	Straight-Through cable	2
4	White/Orange	Ethernet TX+	Straight-Through cable	1
5	Yellow	Not used	No connection	
1	White	Remote switch/ Ignition Sense	No connection, just strip and tin the wire ends	
2	Black	Ground	No connection, just strip and tin the wire ends	
3	Red	Power +12 VDC	No connection, just strip and tin the wire ends	

3. Strip and tin the remaining wires (power, ground, remote switch wire ends) of the power cable.

   Note: The yellow wire of the power cable is for future use, so it can be left with no connection

4. Use tie wraps for strain relief if necessary (see Figure 6).
5. The remote switch/ignition can be used for vehicles to ensure that power is only supplied to the terminal when the Ignition switch is on. If the remote switch/ignition wire is not used, then Pin 1 and Pin 3 need to be connected or Pin 1 needs to be connected to the power source.

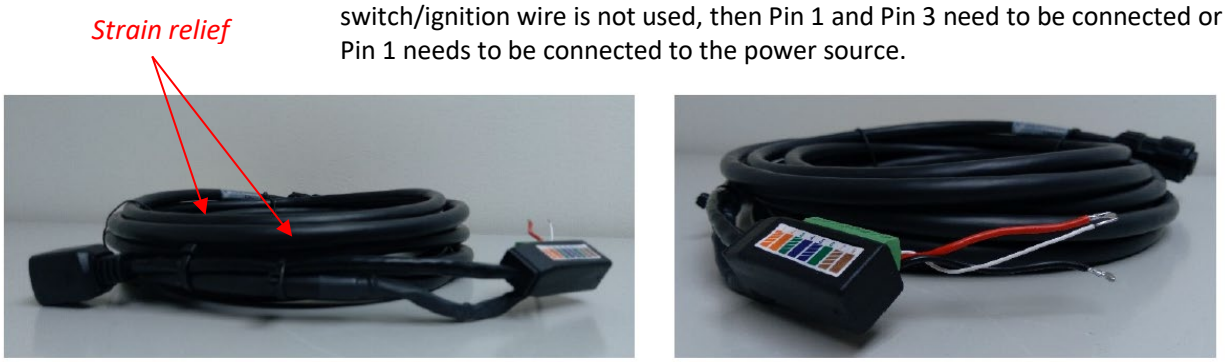

Figure 6. Power cable connected to an RJ45: Final results

Chapter 3

Vehicular installation

3.1 Basic installation procedure

The basic installation procedure is as follows:

1. Decide where you are going to install the satellite terminal.
2. Determine the cable length required for the power installation.
3. Install the satellite SIM card.
4. Permanently install using the provided mounting kit or install three magnetic mounts for vehicle roof mounting (optional).
5. Connect the power and data cables to the terminal.
6. Connect the terminal to the user equipment.

3.2 Installation notes

1. Whenever routing cable through holes drilled in metal or through bulkheads, use grommets and RTV sealant to weatherproof all holes drilled on the outside of the vehicle.
2. Use cable ties every 300–450 mm
3. The main power line must be connected to a fused 12 VDC power source. A 10 A fuse is required in the source to protect against shorts in the cabling. If connecting to a circuit in the fuse box that is already in use, ensure that the circuit can supply the unit with at least 6 A.
4. Route and connect the white ignition sense wire to a switched 12 VDC source.
5. Always provision internal wiring with a drip loop.

3.3 Permanent mount installation

3.3.1 Installation

When permanently installing the terminal on vehicles, some important guidelines must be followed to ensure long and trouble-free operation.

1. Always install the terminal so that it is in a horizontal position, even if the surface on which it is installed (e.g. the roof of a vehicle) is not horizontal.

   The antenna has drainage holes at the bottom.

2. Always install the terminal so that the clearance between the drainage holes at the bottom of the antenna and the mounting surface is no less than 5 mm and preferably 10 mm.

   The hole pattern needed to permanently mount the terminal is shown in Figure 8 (see installation guidelines for mounting advice).

Not following the above guidelines will void the warranty of the antenna. If in doubt, please consult SpaceCom at service@spacecom.dk or call (+45) 98511576, Service Department.

3. In order to fulfill the criteria 1 and 2 above, use the supplied set of mounting hardware as shown in Figure 7.

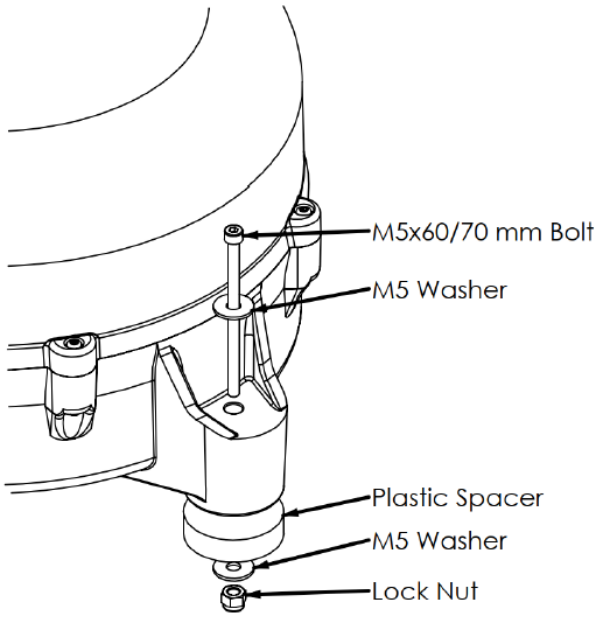

Figure 7. 9410 mounting hardware

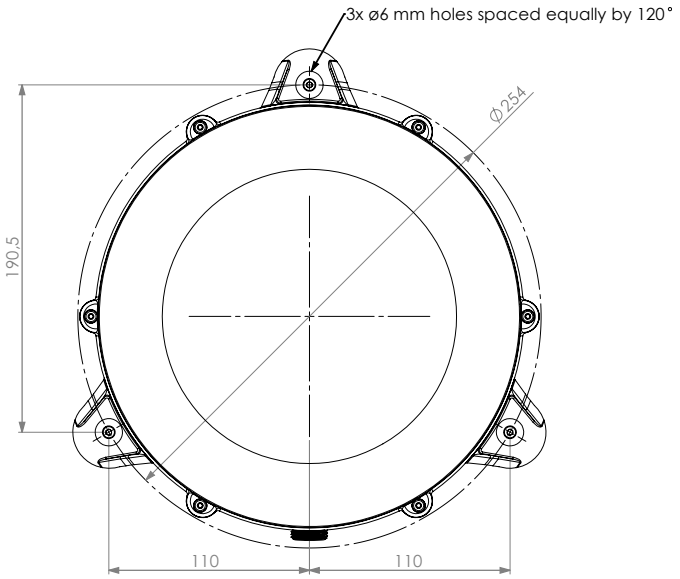

Figure 8. 9410 mounting hole pattern

The installation kit included with the antenna contains two sets of M5 bolts (60mm and 70mm), stainless steel washers, plastic spacers and lock nuts. The included plastic spacers allow the antenna to have sufficient clearance between the bottom of the radome and the mounting surface. The two different bolt lengths included are used for different mounting surface thickness, see Figure 9 and Figure 10.

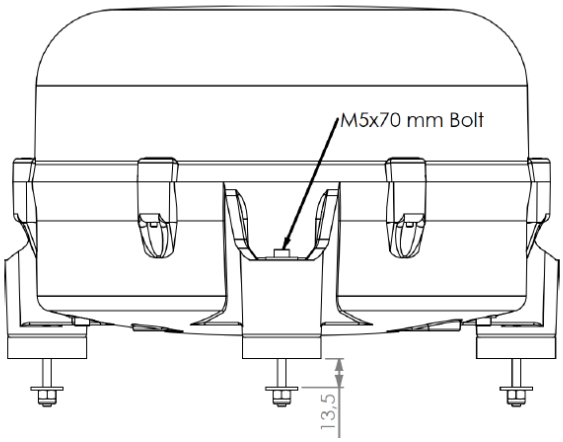

Figure 9. Installation using a M5x70 mm

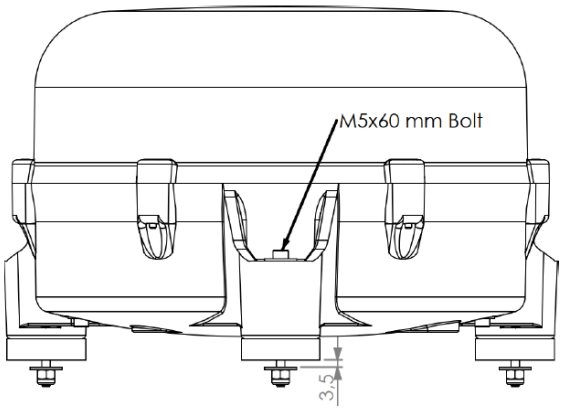

Figure 10. Installation using a M5x60 mm bolt

A dedicated magnet mounting kit (P/N: SAC-1030) can be used when installing the antenna onto a car roof. Refer to Section 3.4 of this document for further information.

3.3.2 Drainage of the antenna

In order to keep the height of the antenna as small as possible and in order to avoid the complex and often unreliable complete sealing of the antenna, a simple mechanism in the form of an opening (drainage channel) in the radome bottom (plastic enclosure) is used. The opening is made so that water – raindrops - are not likely to enter the radome and simultaneously water that incidentally has entered

the radome or moisture condensed inside the radome is drained out simply be gravity. Correct function of the drainage system will only be ensured by following criteria mentioned on page 12.

3.3.3 Cleaning

The antenna can be cleaned and washed together with the vehicle (hosing down or driving through a washing tunnel). When using a pressure washer, do not direct the jet towards the antenna from short distance. Avoid pressure washing at maximum pressure; the sealing gasket may not withstand such high-pressure jet.

Never direct a water jet towards the drainage holes at the radome bottom. Too much water may be forced up the drainage channel.

3.4 Magnetic mounting (optional)

Three magnetic mounts (P/N: 3501152-0002) are optional for the terminal installation. These mounts will withstand 100 mph of wind force. If the antenna cannot be mounted using the magnetic feet, the mounting holes can be used to bolt the antenna onto a roof bracket system.

The magnetic mount consists of three high-intensity magnets. Each magnet has a stainless steel M5 center bolt. There are “three” legs on the antenna where the magnets are bolted in place. Note the position of the stainless-steel washer above the upper washer and the M5 protective nut on top. Use 6.1 Nm of torque to tighten the screw and nut. See installation details in Figure 11 and Figure 12.

For the dismounting, grasp the antenna near one of the magnets and lift up. When one magnet is loose, the other two will be easy to release. In some situations, the magnetic force is so large that it is necessary to unscrew the antenna first and remove the magnets separately.

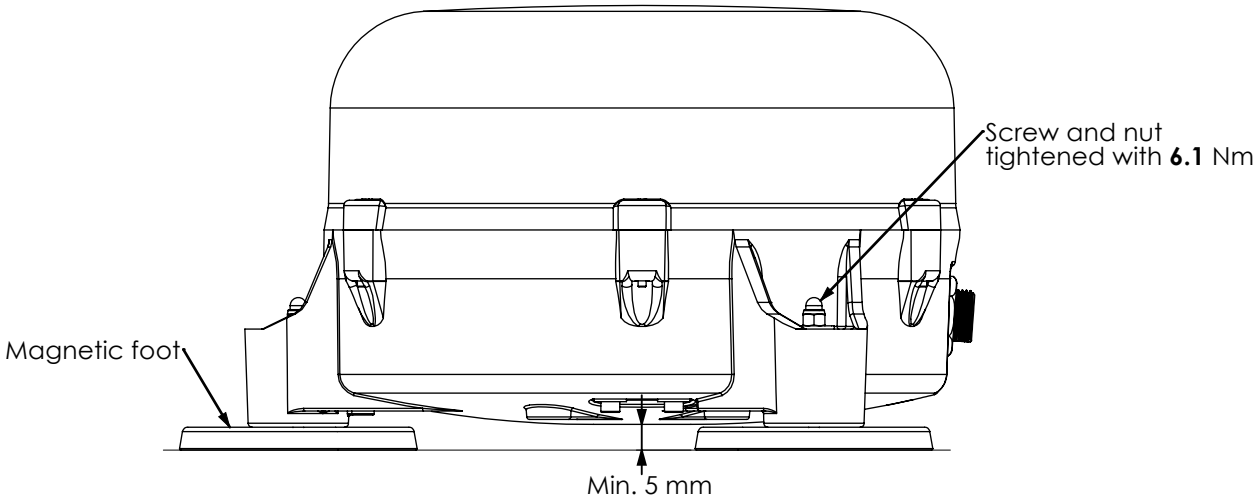

Figure 11. Magnetic mount installation

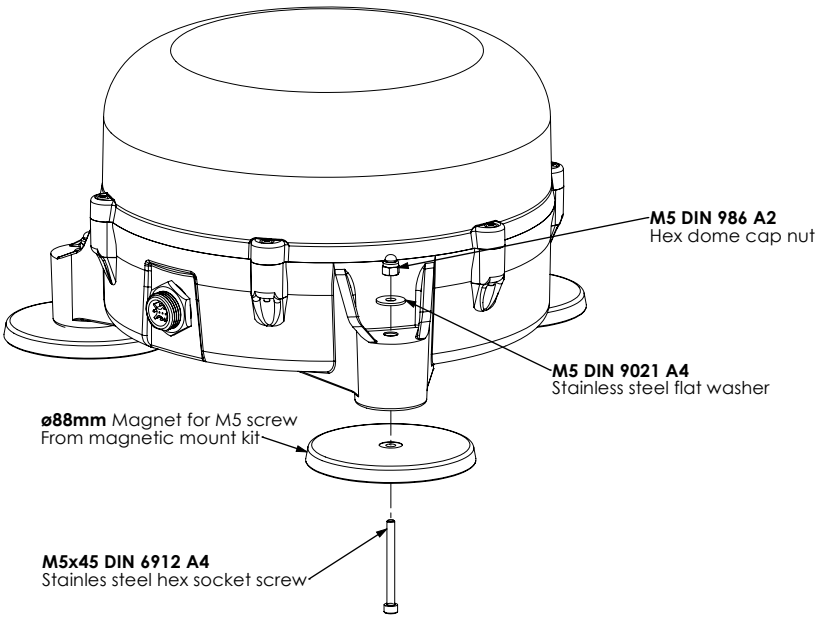

Figure 12. Magnetic mount installation details